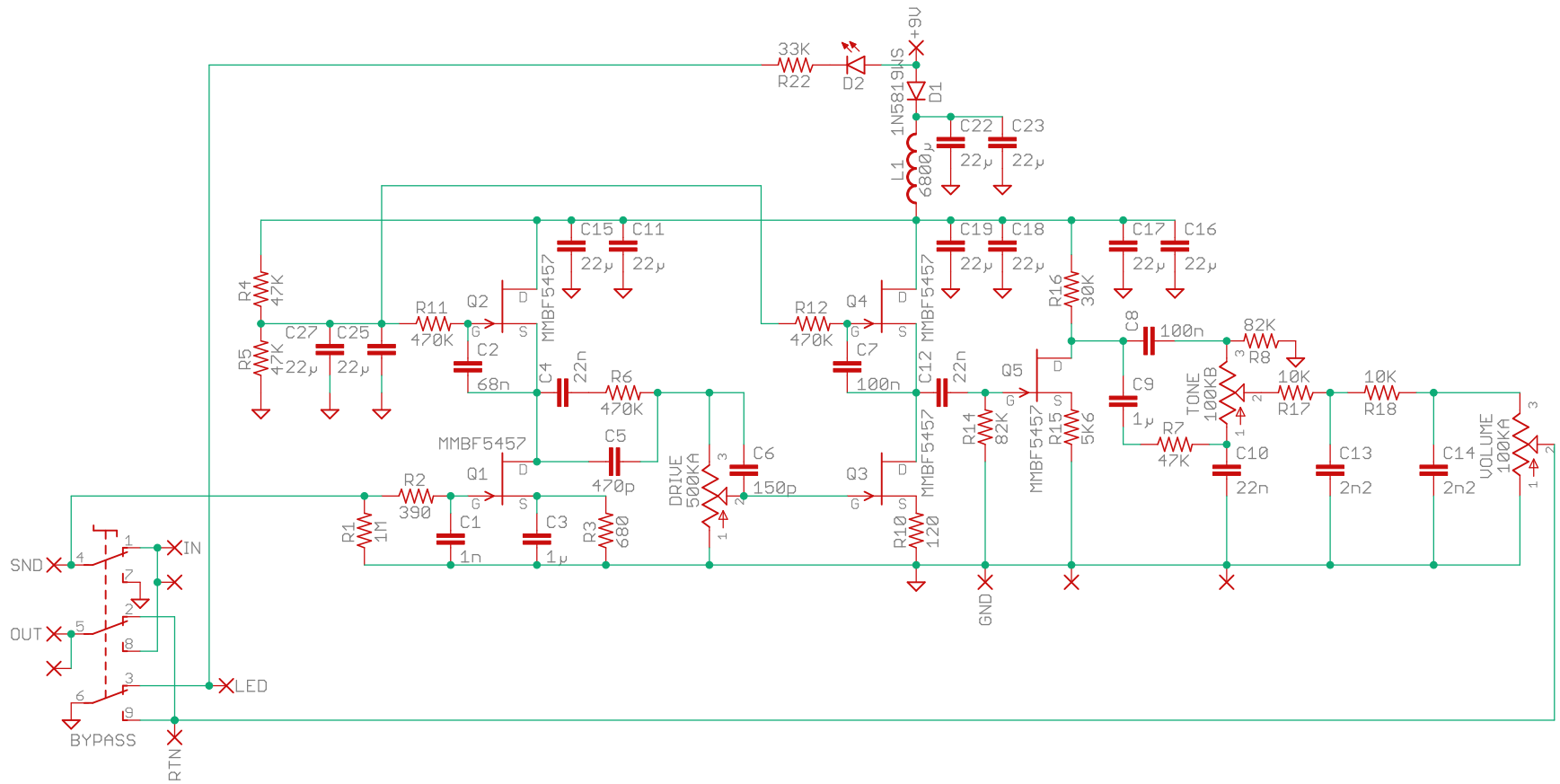

Copyright Darron Thornbury

Brown Sound

19/9/23 7:07 AM

Sheet: 1/1